RJ45 (8P8C) Flex Test Connector

TCO-3886

BLUELEC
Part of JOT Automation

The **TCO-3886** RJ45 (8P8C) Flex Test Connector is a straight signalling test connector for RJ45 interface testing — desktops, laptops, TVs, set-top boxes, ethernet routers and switches.

Its compact design suits space-limited applications, and the slim test-plug end makes it ideal for multiport sockets.

All eight conductors are routed straight through (1:1). High data-rate transmission is achievable and should be verified by the customer in the applied test setup.

Designed for production testing, product development, repair and service centres, and laboratory use.

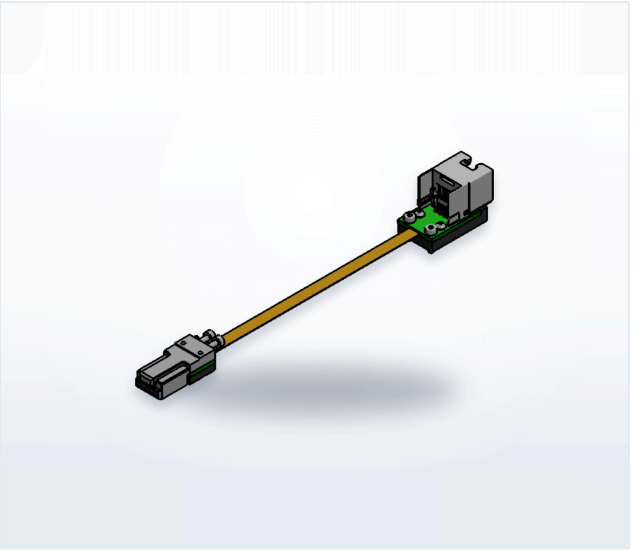

The flex cable is not designed for dynamic bending.

ELECTRICAL

Max. current	**0.5 A**
Max. voltage	**20 Vrms**
Dataline diff. impedance	**100 Ω**

MECHANICAL

Mating force	**9 N (typ.)**
Unmating force	**4 N (typ.)**
Durability	**50 000 cycles (typ.)**
Flex bend radius, static	**20 mm (0.79 in) (min.)**
Flex length	**100 mm (3.94 in)**

ENVIRONMENTAL

Operating temperature	**0 – 60 °C**
Storage temperature	**−20 … +70 °C**
Relative humidity	**15 – 95 % non-condensing**
Compliance	**RoHS**

PINOUT

straight 1:1

Socket		Plug
1	→	1
2	→	2
3	→	3
4	→	4
5	→	5
6	→	6
7	→	7
8	→	8

DIMENSIONS

mm

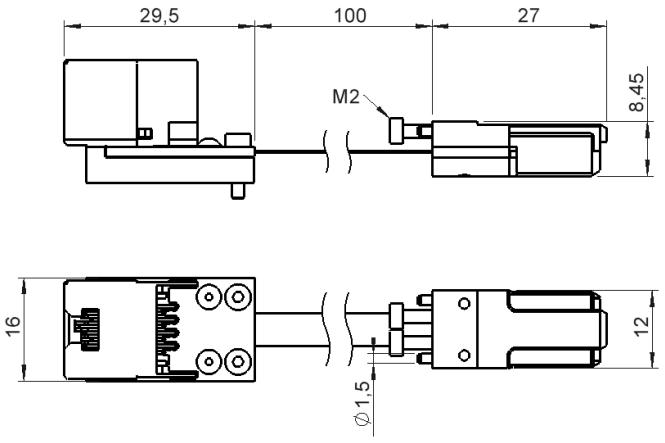

OPTIONAL ACCESSORIES

Float unit A float unit for this test connector is in development — contact **sales@bluelec.com** for availability.

3D CAD models available on request via **sales@bluelec.com**

© 2026 Bluelec Oy. All rights reserved.