RJ45 (8P8C) Stacked Test Connector

BLUELEC
Part of JOT Automation

TCO-3876 | 12.1 mm port offset

TCO-3876 Stacked RJ45 Test Connector is a straight signaling double test plug for stacked RJ45 interface testing.

Suitable for all devices with corresponding offset (12.1 mm) RJ45 connectors.

The transmission of high data rates can be achieved, recommended to be verified by our customers in their applied test setup.

Both connectors are wired straight through (1:1) and mate simultaneously with the two stacked ports of the device under test.

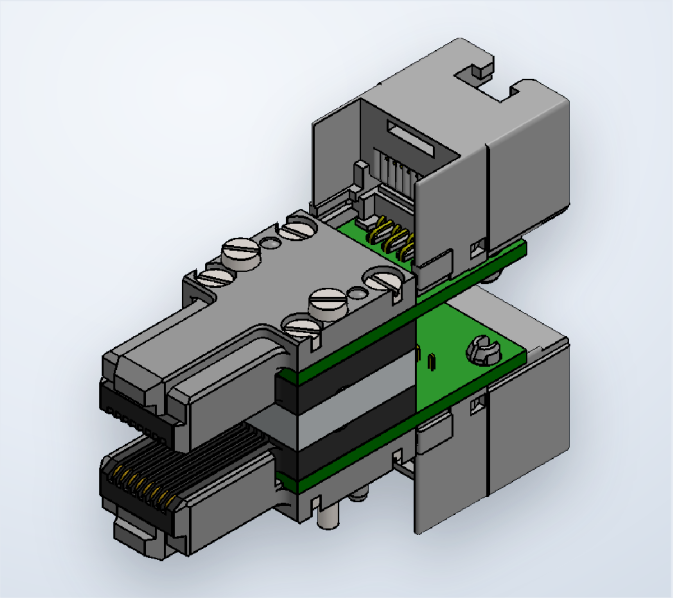

ELECTRICAL

Max. current	**0.5 A**
Max. voltage	**20 Vrms**
Dataline diff. impedance	**100 Ω**
Signal routing	**Straight 1:1, both ports**

MECHANICAL

Mating force	**25 N (typ.)**
Unmating force	**15 N (typ.)**
Durability	**50 000 cycles (typ.)**
Port offset (pitch)	**12.1 mm**
Mounting	**2 × M2, Ø2 mm dowel**

ENVIRONMENTAL

Operating temperature	**0 – 60 °C**

PINOUT

both connectors

Socket		Plug
1	→	1
2	→	2
3	→	3
4	→	4
5	→	5
6	→	6
7	→	7
8	→	8

Each of the two stacked ports carries its own independent 1:1 eight-conductor path. There is no crossover or bridging between the upper and lower connector.

Dimensioned drawing on page 2.

3D CAD models available on request via **sales@bluelec.com**

© 2026 Bluelec Oy. All rights reserved.
sales@bluelec.com · www.bluelec.com

RJ45 (8P8C) Stacked Test Connector | TCO-3876

BLUELEC
Part of JOT Automation

DIMENSIONS

all dimensions in mm · decimal comma

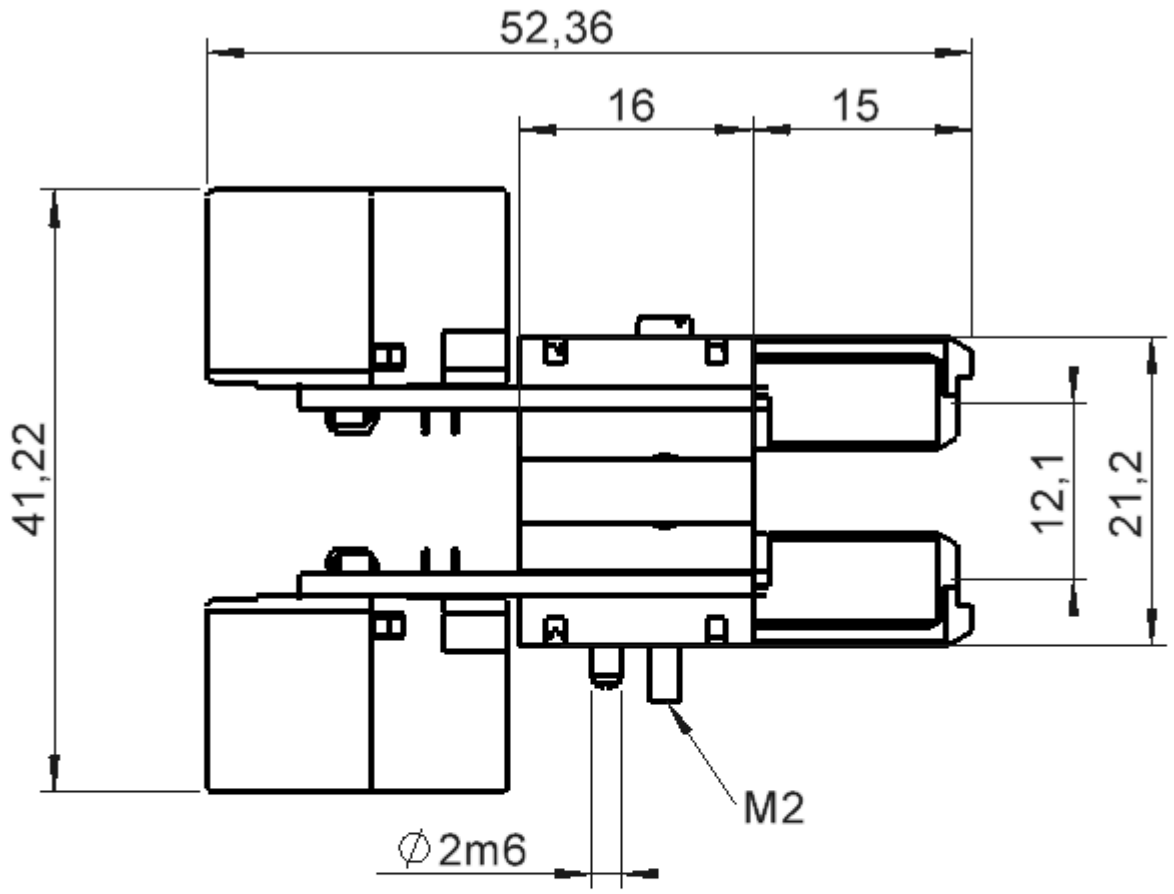

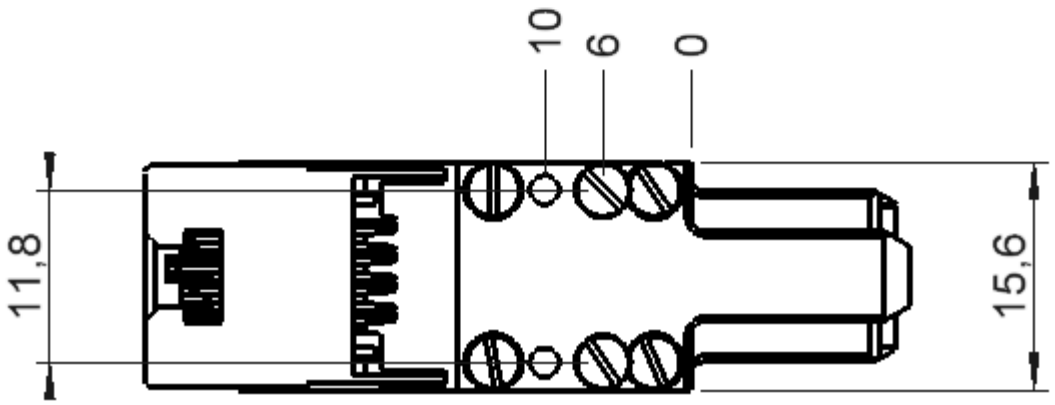

Upper view: front elevation, showing the 52,36 mm overall length, 41,22 mm height and the 12,1 mm offset between the two plug centrelines.

Lower view: top elevation, showing the 15,6 mm body width and the mounting interface — two M2 threads with a Ø2 mm locating dowel.

© 2026 Bluelec Oy. All rights reserved.
sales@bluelec.com · www.bluelec.com