RCA Test Connector

TCO-3742

BLUELEC
Part of JOT Automation

The **TCO-3742** is a highly durable test connector for testing the RCA interface. A reliable, durable and highly accurate replacement for commercial cables and connectors.

The GND contact is made with spring probes, enabling a very low mating force compared to conventional RCA plugs.

The probes are covered with a 360° shield, protecting them from damage and improving the noise immunity of the test connector.

Designed for production testing, product development, repair and service centres, and laboratory use.



ELECTRICAL

Max. current	**1.0 A**
Max. voltage	**20 Vrms**

MECHANICAL

Durability	**50 000 cycles (typ.)**
GND probes working travel	**2.4 mm (0.09 in)**
GND probes max. travel	**~2.8 mm (0.11 in)***

* A mechanical stopper in the test connector prevents the GND probes from travelling any further when plugged into a typical RCA female connector.

ENVIRONMENTAL

Operating temperature	**0 – 60 °C**
Storage temperature	**−20 … +70 °C**
Relative humidity	**15 – 95 % non-condensing**
Compliance	**RoHS**

INTERFACE

Interface	**RCA**
GND contact	**Spring probes**
Shielding	**360° shield**

DIMENSIONS

mm

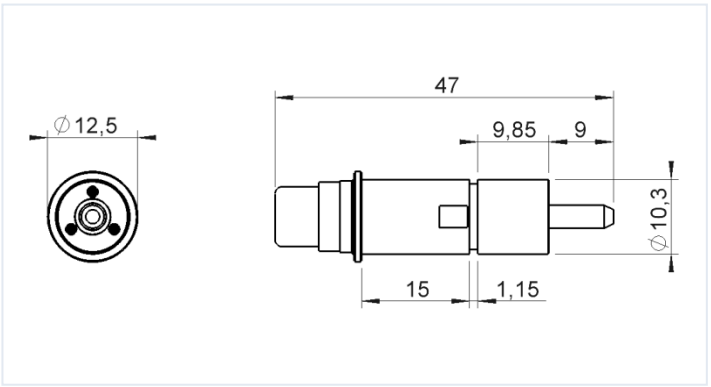

OPTIONAL ACCESSORIES

Float unit A float unit for this test connector is in development — contact **sales@bluelec.com** for availability.

3D CAD models available on request via **sales@bluelec.com**

© 2026 Bluelec Oy. All rights reserved.
sales@bluelec.com · www.bluelec.com