VIBRATION SENSOR · DATASHEET

3-Axis Vibration Sensor

PCB-1348

BLUELEC
Part of JOT Automation

The **PCB-1348** is a 3-axis vibration sensor developed for use with automation equipment — for example, accurate sensing of machine vibrations during automated work cycles.

It simultaneously measures acceleration on the X, Y and Z axes, providing three independent analogue outputs on a single shielded M12 connector.

The sensor mounts to the machine frame or fixture via two through-holes, and its shielded interface supports reliable signal transmission in electrically noisy environments.

Designed for automated and semi-automated production equipment.

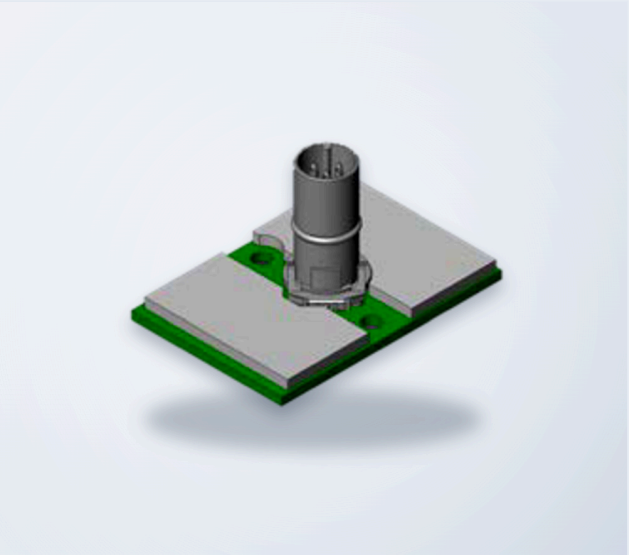

ELECTRICAL

Axes	**X, Y, Z (independent)**
Frequency range	**1 – 200 Hz (−3 dB)**
Sensitivity	**2 V/g**
Acceleration range	**±2 g**
Supply voltage	**24 V**

MECHANICAL

Body size	**30 × 44 mm (1.18 × 1.73 in)**
Height	**22.9 mm (0.90 in)**
Mounting holes	**2 × Ø3.2 mm (Ø0.13 in)**
Connector	**M12 shielded, 5-pos. A-coded**

ENVIRONMENTAL

Operating temperature	**0 – 50 °C**
Storage temperature	**−20 … +70 °C**
Relative humidity	**15 – 90 % non-condensing**
Compliance	**RoHS**

PINOUT

M12 5-pos.

Pin	Signal
1	Z-OUT
2	V+
3	X-OUT
4	Y-OUT
5	GND

DIMENSIONS

mm

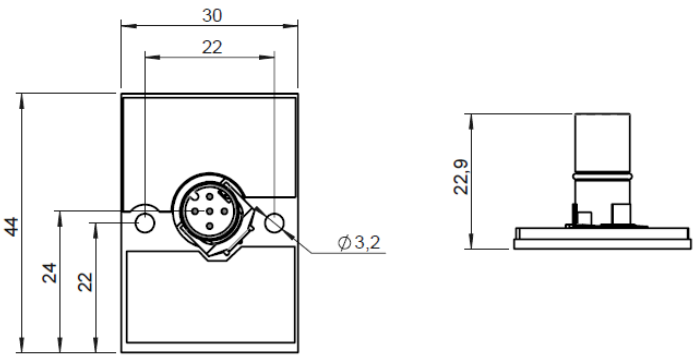

TYPICAL FREQUENCY RESPONSE

gain vs. frequency

3D CAD models available on request via **sales@bluelec.com**

© 2026 Bluelec Oy. All rights reserved.
sales@bluelec.com · www.bluelec.com

Datasheet Rev. A3 · November 2026
Specifications subject to change without notice.