FLOAT UNIT · DATASHEET

USB2 Type-B Float Unit

MA101829

BLUELEC
Part of JOT Automation

MA101829 is a float unit for the Bluelec USB 2.0 Type-B test connector. It compensates the possible misalignments between test system mechanics and DUT socket and enables smoother insertion of the test connector.

The test connector is mounted on the floating part; the fixed part is bolted to the test mechanics. The default position of the floating part is '0' for all axes. Displacement of Z is needed to allow displacement of X and Y.

> **During installation, support the floating part to prevent it from bending downward.**

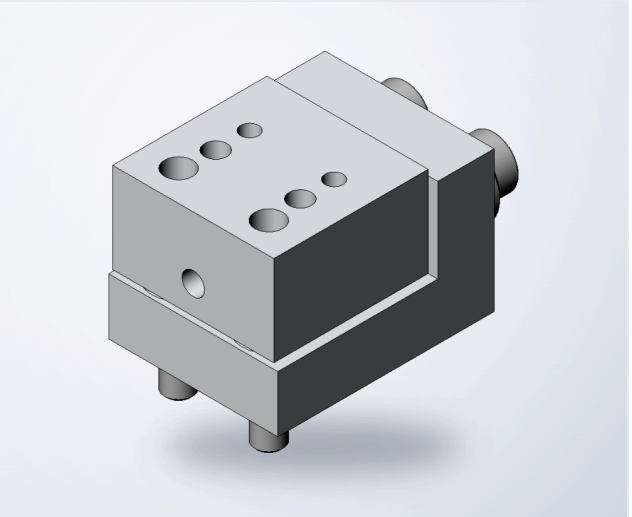

SPECIFICATIONS

Displacement Z max	**+0.0 / −0.5 mm**
Displacement X max @ Z max	**±0.3 mm**
Displacement Y max @ Z max	**±0.3 mm**
Spring force F @ Z_0	**~10 N**
Spring force F @ Z max	**~14.5 N**

MOUNTING

Fastening, bottom side	**M2.5 screw**
Locating	**Ø2 mm dowel pin (m6)**

COMPATIBLE TEST CONNECTORS

TCO-3879 USB2 Type-B Test Connector

Sold separately from the test connector.

DIMENSIONS

mm

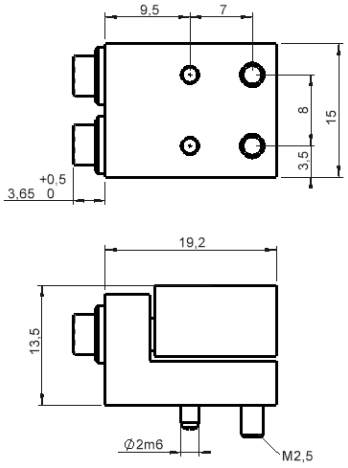

OPERATING PRINCIPLE

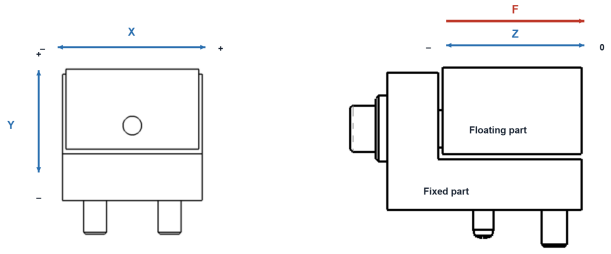

ENVIRONMENTAL

Operating temperature	**0 – 60 °C**
Storage temperature	**−20 … +70 °C**
Relative humidity	**15 – 95 % non-condensing**
Compliance	**RoHS**

3D CAD models available on request via **sales@bluelec.com**

© 2026 Bluelec Oy. All rights reserved.
sales@bluelec.com · www.bluelec.com

Datasheet Rev. A3 · November 2026
Specifications subject to change without notice.