FLOAT UNIT · DATASHEET

# Shielded RJ45 Float Unit

**MA092003**

BLUELEC
Part of JOT Automation

The **MA092003** float unit provides a spring-loaded floating mount for a Bluelec shielded RJ45 (8P8C) test connector in the test fixture. It compensates for possible misalignment between the test-system mechanics and the DUT socket, enabling smooth, low-stress insertion of the test connector.

The test connector is mounted on the floating part and positioned by dowel pins. The fixed part is bolted to the test mechanics. By default, the floating part is centered at position '0' on all axes; Z-axis displacement enables movement in the X and Y directions.

Designed for automated and semi-automated production test fixtures.

**During installation, support the floating part with a 0.5 mm plate to prevent it from bending downward.**

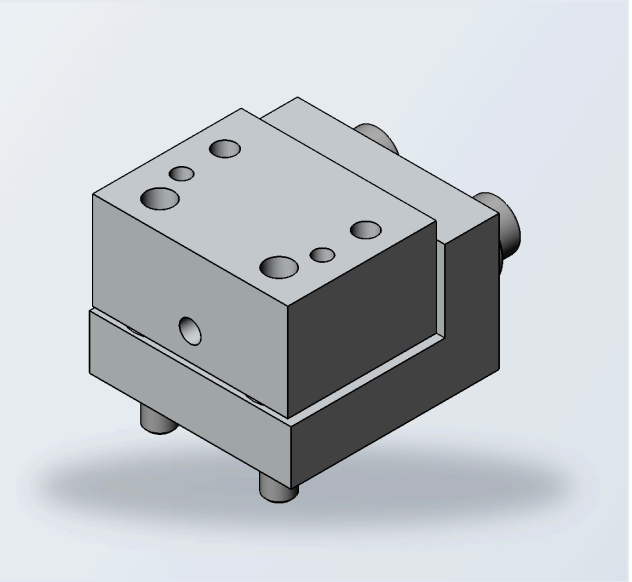

## SPECIFICATIONS

| | |
|---|---|
| Displacement, Z max | **+0.0 / −0.5 mm** |
| Displacement, X max @ Z max | **±0.3 mm** |
| Displacement, Y max @ Z max | **±0.3 mm** |
| Spring force F @ $Z_0$ | **~10 N** |
| Spring force F @ Z max | **~14.5 N** |

## MOUNTING

| | |
|---|---|
| Fastening, bottom side | **2× M2.5 hex socket screw** |
| Locating | **2× Ø2 mm (Ø0.08 in) dowel pin (m6)** |
| Thread depth in mechanics | **M2.5, min. 4 mm (0.16 in)** |
| Dowel hole depth in mechanics | **Ø2 mm (Ø0.08 in), min. 3 mm (0.12 in)** |

## COMPATIBLE TEST CONNECTORS

**MA002667** Shielded RJ45 (8P8C) Test Connector

Sold separately from the test connector.

## DIMENSIONS

mm

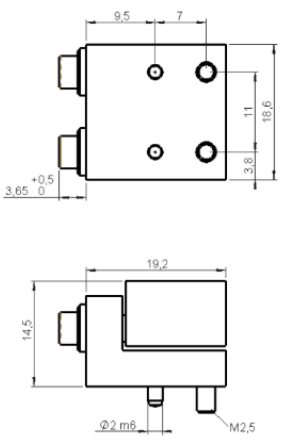


## OPERATING PRINCIPLE

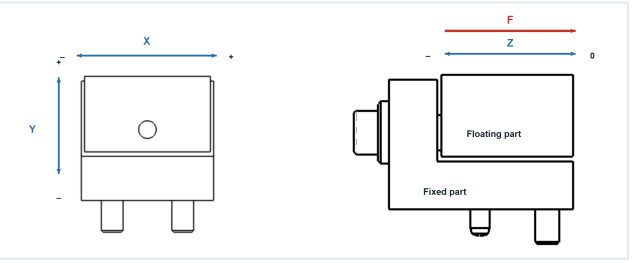


## ENVIRONMENTAL

| | | | |
|---|---|---|---|
| Operating temperature | **0 – 60 °C** | Relative humidity | **15 – 95 % non-condensing** |
| Storage temperature | **−20 … +70 °C** | Compliance | **RoHS** |

**3D CAD models available on request** via **sales@bluelec.com**

© 2026 Bluelec Oy. All rights reserved.
sales@bluelec.com · www.bluelec.com

Datasheet Rev. A5 · November 2026
Specifications subject to change without notice.

# Shielded RJ45 Float Unit

**MA092003**

BLUELEC
Part of JOT Automation

## CONNECTOR INSTALLATION

The float unit accepts the shielded RJ45 (8P8C) test connector MA002667. The mounting screws supplied with the test connector are installed from the opposite side and the dowel pins repositioned before mounting, as shown below.

### MA002667 REVERSED SCREW CONFIGURATION

When using the float with Test Connector **MA002667**, the mounting screws must be installed from the opposite side of the default configuration. The default countersunk screws can be reused, but **M2×12 mm cap-head screws** are recommended. Press the dowel pins to the opposite side.

**BEFORE** — default countersunk screws

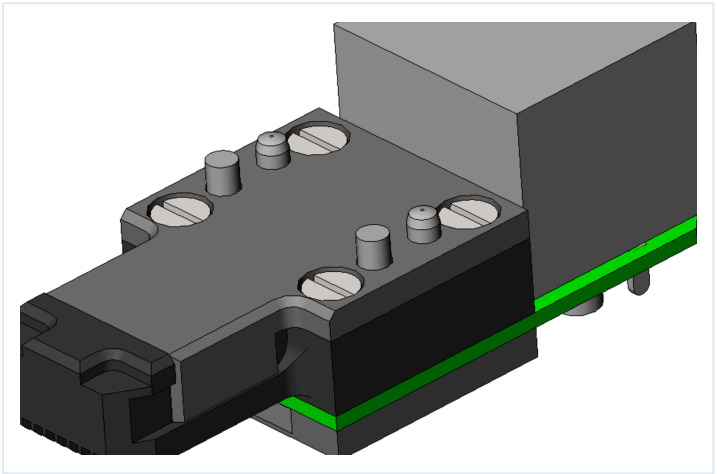

**AFTER** — recommended M2×12 mm cap-head screws

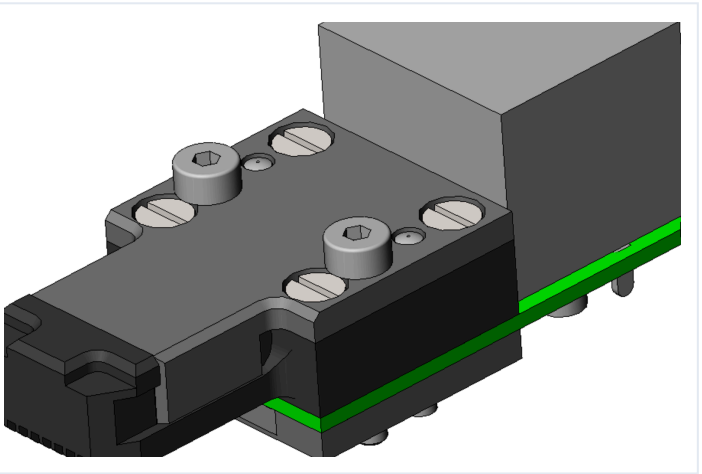

**INSTALLED** — on mechanics

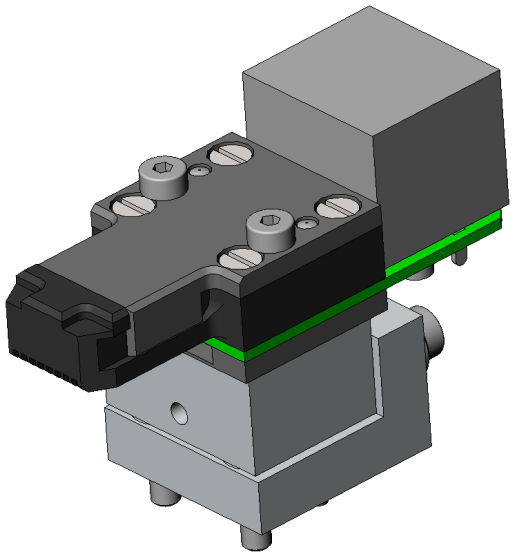

Once the screws and dowel pins are repositioned, the float unit is first bolted to the test mechanics, and the test connector is then mounted to the float unit.

The BEFORE and AFTER views show the mounting-screw area of the float unit, seen from the top face.

© 2026 Bluelec Oy. All rights reserved.
sales@bluelec.com · www.bluelec.com