USB Mini-B Test Connector

MA090828

BLUELEC
Part of JOT Automation

The **MA090828** USB Mini-B Test Connector is a 5-pin connector with straight signaling, designed for testing of the USB Mini interface.

All five pins are contacted — VBUS, the D± data pair, ID and GND — allowing full functional testing of the Mini-USB interface.

Signaling is routed straight through with no crossover, supporting USB 2.0 High-Speed (480 Mbit/s) operation; performance should be verified by the customer in the applied test setup.

Designed for production testing, product development, repair and service centres, and laboratory use.

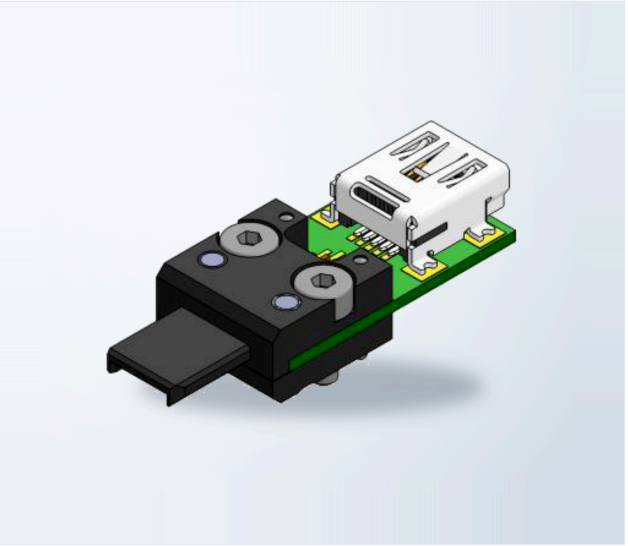

ELECTRICAL

Max. current	**1.0 A**
Max. voltage	**30 Vrms**
Dataline diff. impedance	**90 Ω**

MECHANICAL

Mating force	**3 N (typ.)**
Unmating force	**1 N (typ.)**
Durability	**50 000 cycles (typ.)**

ENVIRONMENTAL

Operating temperature	**0 – 60 °C**
Storage temperature	**−20 … +70 °C**
Relative humidity	**15 – 95 % non-condensing**
Compliance	**RoHS**

PINOUT

Socket / Plug

Pin	Name
1	VBUS
2	D−
3	D+
4	ID
5	GND

DIMENSIONS

mm

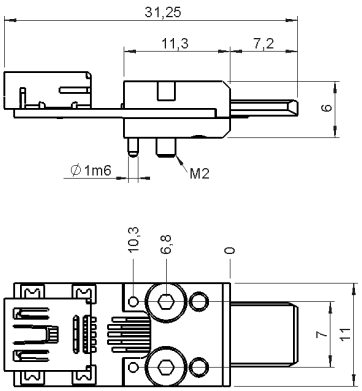

OPTIONAL ACCESSORIES

MA091628 Float unit for the USB Mini-B Test Connector — compensates for positional misalignment in automated test fixtures. Sold separately.

3D CAD models available on request via **sales@bluelec.com**

© 2026 Bluelec Oy. All rights reserved.
sales@bluelec.com · www.bluelec.com