RJ45 Float Unit

MA085139

BLUELEC
Part of JOT Automation

The **MA085139** float unit provides a spring-loaded floating mount for a Bluelec RJ45 (8P8C) test connector in the test fixture. It compensates for possible misalignment between the test-system mechanics and the DUT socket, enabling smooth, low-stress insertion of the test connector.

The test connector is mounted on the floating part and positioned by dowel pins. The fixed part is bolted to the test mechanics. By default, the floating part is centered at position '0' on all axes; Z-axis displacement enables movement in the X and Y directions.

Designed for automated and semi-automated production test fixtures.

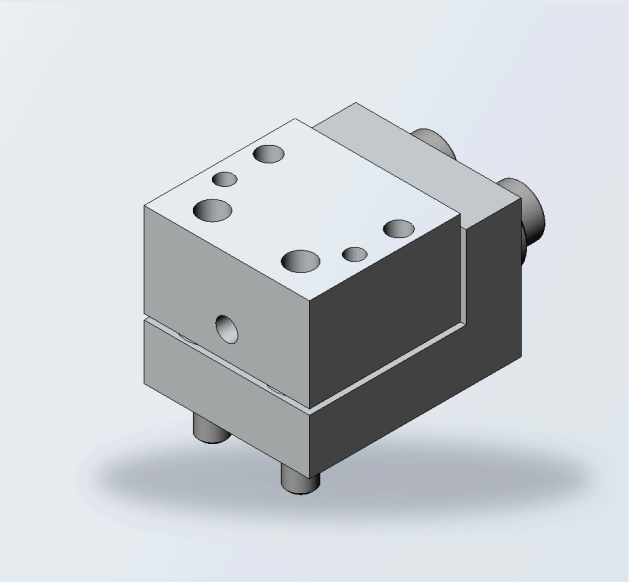

During installation, support the floating part with a 0.5 mm plate to prevent it from bending downward.

SPECIFICATIONS

Displacement, Z max	**+0.0 / −0.5 mm**
Displacement, X max @ Z max	**±0.3 mm**
Displacement, Y max @ Z max	**±0.3 mm**
Spring force F @ Z_0	**~10 N**
Spring force F @ Z max	**~14.5 N**

MOUNTING

Fastening, bottom side	**2× M2.5 hex socket screw**
Locating	**2× Ø2 mm (Ø0.08 in) dowel pin (m6)**
Thread depth in mechanics	**M2.5, min. 4 mm (0.16 in)**
Dowel hole depth in mechanics	**Ø2 mm (Ø0.08 in), min. 3 mm (0.12 in)**

COMPATIBLE TEST CONNECTORS

MA014781	RJ45 (8P8C) Test Connector
MA036427	RJ45 (8P8C) Reverse-Mount Test Connector

For unshielded Bluelec RJ45 test plugs. Sold separately from the test connector.

DIMENSIONS

mm

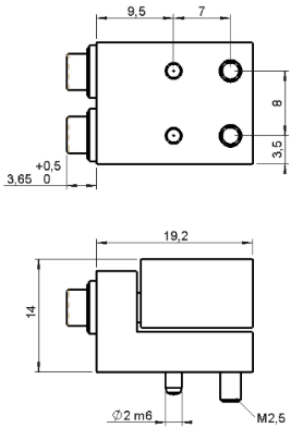

OPERATING PRINCIPLE

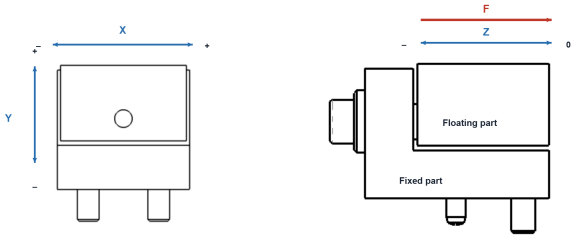

ENVIRONMENTAL

Operating temperature	**0 – 60 °C**	Relative humidity	**15 – 95 % non-condensing**
Storage temperature	**−20 … +70 °C**	Compliance	**RoHS**

3D CAD models available on request via **sales@bluelec.com**

© 2026 Bluelec Oy. All rights reserved.
sales@bluelec.com · www.bluelec.com
Datasheet Rev. A4 · November 2026
Specifications subject to change without notice.

RJ45 Float Unit

MA085139

BLUELEC
Part of JOT Automation

CONNECTOR INSTALLATION

The float unit accepts two RJ45 (8P8C) test connectors. The mounting configuration differs between them, as shown below.

MA036427 DEFAULT CONFIGURATION

Assembled with the Reverse-Mount Test Connector as shipped. The countersunk mounting screws seat from the float side; no changes are required.

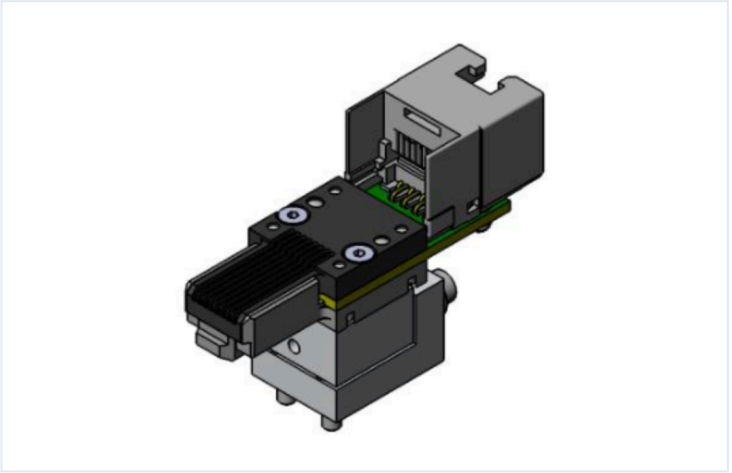

MA014781 REVERSED SCREW CONFIGURATION

When using the float with Test Connector **MA014781**, the mounting screws must be installed from the opposite side of the default configuration. Replace the default countersunk screws with **M2×12 mm cap-head screws**, and press the dowel pins to the opposite side.

BEFORE — default screws

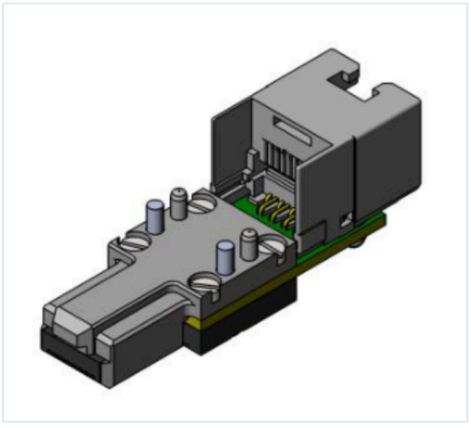

AFTER — reversed

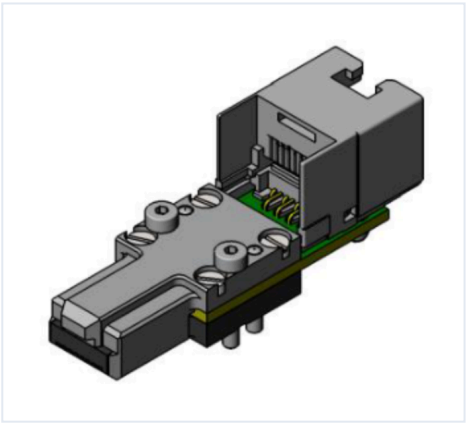

INSTALLED — on mechanics

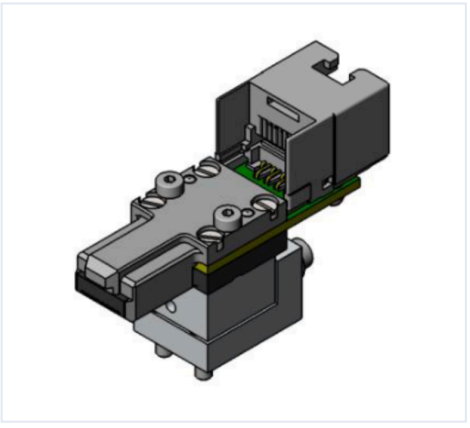

Once the screws and dowel pins are repositioned, the float unit is first bolted to the test mechanics, and the test connector is then mounted to the float unit.

© 2026 Bluelec Oy. All rights reserved.
sales@bluelec.com · www.bluelec.com