FLOAT UNIT · DATASHEET

Mini DisplayPort Float Unit

MA030013

BLUELEC
Part of JOT Automation

The **MA030013** float unit provides a spring-loaded floating mount for a Bluelec Mini DisplayPort test connector in the test fixture. It compensates for possible misalignment between the test-system mechanics and the DUT socket, enabling smooth, low-stress insertion of the test connector.

The test connector is mounted on the floating part and positioned by dowel pins. The fixed part is bolted to the test mechanics. By default, the floating part is centered at position '0' on all axes; Z-axis displacement enables movement in the X and Y directions.

Designed for automated and semi-automated production test fixtures.

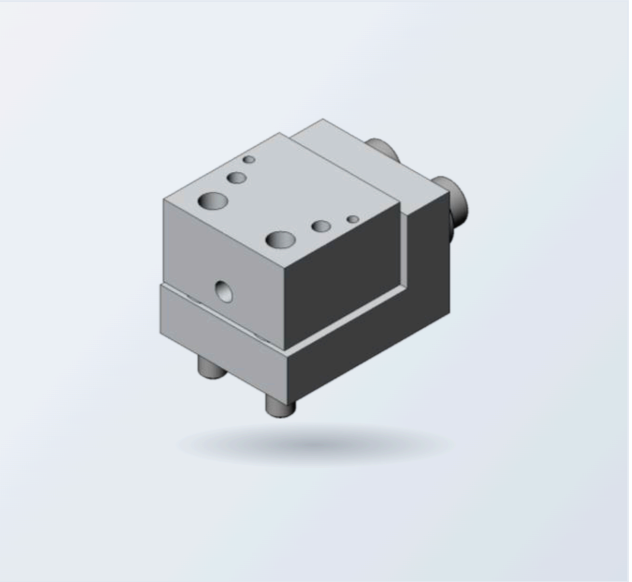

During installation, support the floating part with a 0.5 mm plate to prevent it from bending downward.

SPECIFICATIONS

Displacement, Z max	**+0.0 / −0.5 mm**
Displacement, X max @ Z max	**±0.3 mm**
Displacement, Y max @ Z max	**±0.3 mm**
Spring force F @ Z_0	**~10 N**
Spring force F @ Z max	**~14.5 N**

MOUNTING

Fastening, bottom side	**2× M2.5 hex socket screw**
Locating	**2× Ø2 mm (Ø0.08 in) dowel pin (m6)**
Thread depth in mechanics	**M2.5, min. 4 mm (0.16 in)**
Dowel hole depth in mechanics	**Ø2 mm (Ø0.08 in), min. 3 mm (0.12 in)**

COMPATIBLE TEST CONNECTORS

MA010395 Mini DisplayPort Test Connector

Sold separately from the test connector.

DIMENSIONS

mm

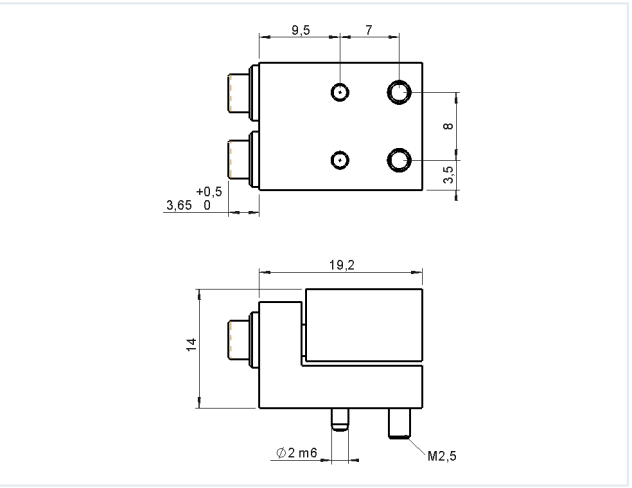

OPERATING PRINCIPLE

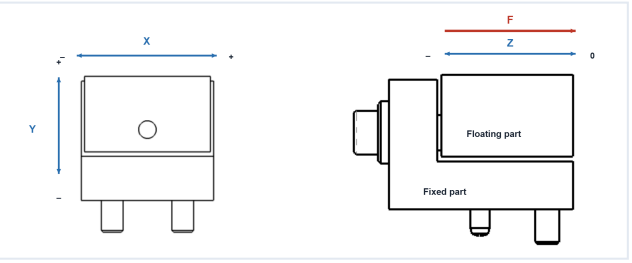

ENVIRONMENTAL

Operating temperature	**0 – 60 °C**	Relative humidity	**15 – 95 % non-condensing**
Storage temperature	**−20 … +70 °C**	Compliance	**RoHS**

3D CAD models available on request via **sales@bluelec.com**

© 2026 Bluelec Oy. All rights reserved.
sales@bluelec.com · www.bluelec.com

Datasheet Rev. A3 · November 2026
Specifications subject to change without notice.