eSATA Test Connector

MA019682

BLUELEC
Part of JOT Automation

The **MA019682** is a 7-pin test plug with straight signalling, designed for testing the eSATA interface between the DUT (Device Under Test) and the test system. A reliable, durable and highly accurate replacement for commercial cables and connectors.

The two differential pairs (A+/A− transmit, B+/B− receive) are routed at 100 Ω differential impedance with interleaved ground returns on pins 1, 4 and 7, preserving signal integrity at SATA data rates.

The transmission of high data rates can be achieved — recommended to be verified in the applied test setup.

Designed for production testing, product development, repair and service centres, and laboratory use.

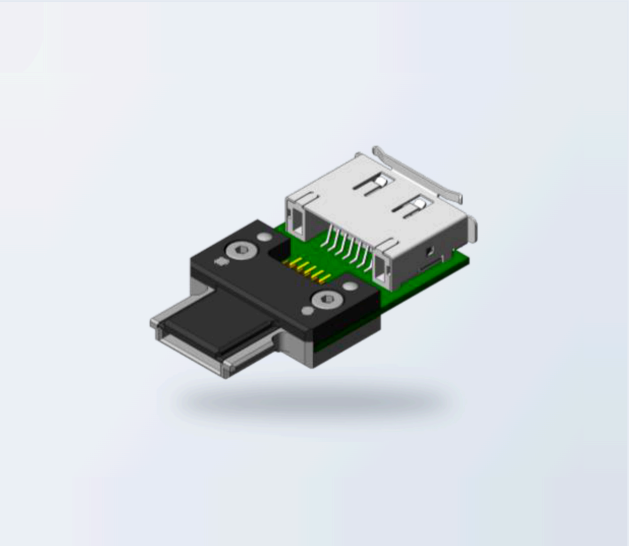

ELECTRICAL

Max. current	**0.4 A**
Max. voltage	**30 Vrms**
Dataline diff. impedance	**100 Ω**

MECHANICAL

Mating force	**7 N (typ.)**
Unmating force	**3 N (typ.)**
Durability	**50 000 cycles (typ.)**

ENVIRONMENTAL

Operating temperature	**0 – 60 °C**
Storage temperature	**−20 … +70 °C**
Relative humidity	**15 – 95 % non-condensing**
Compliance	**RoHS**

PINOUT

socket/plug

Pin	Name
1	GND
2	A+
3	A−
4	GND
5	B−
6	B+
7	GND

DIMENSIONS

mm

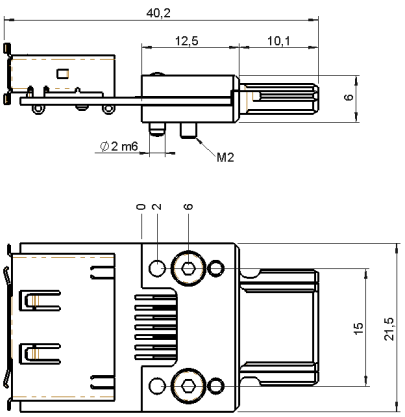

OPTIONAL ACCESSORIES

Float unit A float unit for this test connector is in development — contact **sales@bluelec.com** for availability.

3D CAD models available on request via **sales@bluelec.com**

© 2026 Bluelec Oy. All rights reserved.
sales@bluelec.com · www.bluelec.com