LTNG Test Connector, Straight

MA015028

BLUELEC
Part of JOT Automation

The **MA015028** LTNG Test Connector, Straight, is an 8-pin single-sided test plug with straight signalling, designed for testing the Apple Lightning interface on mobile devices. A reliable, durable and highly accurate replacement for commercial cables and connectors.

All eight conductors are routed straight through (1:1) at 90 Ω dataline differential impedance. Power pins 1 and 5 carry up to 1.2 A; the remaining pins are rated 0.25 A. For the right-angle variant, see **MA013244**.

The transmission of high data rates can be achieved — recommended to be verified in the applied test setup.

Designed for production testing, product development, repair and service centres, and laboratory use.

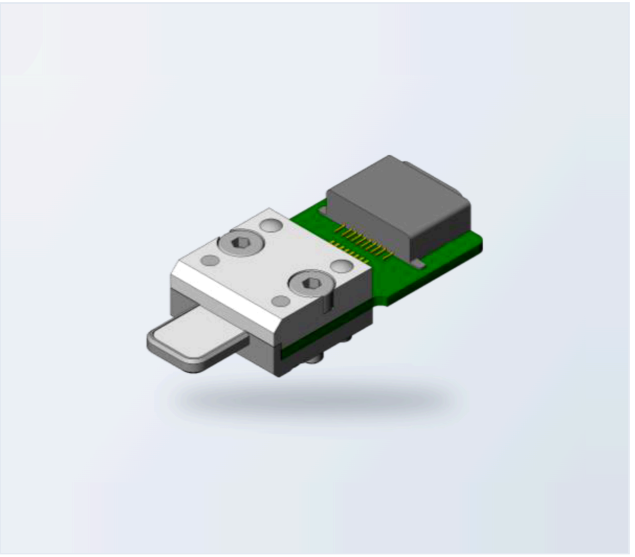

ELECTRICAL

Max. current (power, pins 1, 5)	**1.2 A**
Max. current (other pins)	**0.25 A**
Max. voltage	**20 Vrms**
Dataline diff. impedance	**90 Ω**

MECHANICAL

Mating force	**6 N (typ.)**
Unmating force	**5 N (typ.)**
Durability	**50 000 cycles (typ.)**

ENVIRONMENTAL

Operating temperature	**0 – 60 °C**
Storage temperature	**−20 … +70 °C**
Relative humidity	**15 – 95 % non-condensing**
Compliance	**RoHS**

PINOUT

straight 1:1

Socket		Plug
1	→	1
2	→	2
3	→	3
4	→	4
5	→	5
6	→	6
7	→	7
8	→	8

DIMENSIONS

mm

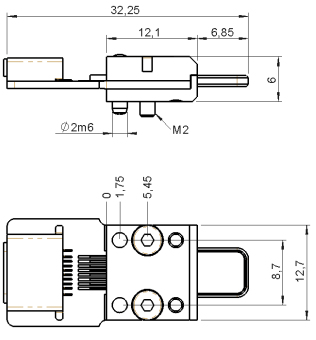

OPTIONAL ACCESSORIES

MA085951 Float unit for the LTNG Test Connector — compensates for positional misalignment in automated test fixtures. Sold separately.

3D CAD models available on request via **sales@bluelec.com**

© 2026 Bluelec Oy. All rights reserved.
sales@bluelec.com · www.bluelec.com