RJ45 (8P8C) Test Connector

MA014781

BLUELEC
Part of JOT Automation

The **MA014781** RJ45 (8P8C) Test Connector is a straight-signalling test plug for RJ45 interface testing. It suits all devices with RJ45 connectors — desktop computers, laptops, televisions, set-top boxes, ethernet routers, ethernet switches and others.

For the reverse-mount variant with the socket connector on the opposite side of the test connector, see **MA036427** — the two are electrically identical.

A reliable, durable and highly accurate replacement for commercial cables and connectors.

The transmission of high data rates can be achieved — recommended to be verified in the applied test setup.

Designed for production testing, product development, repair and service centres, and laboratory use.

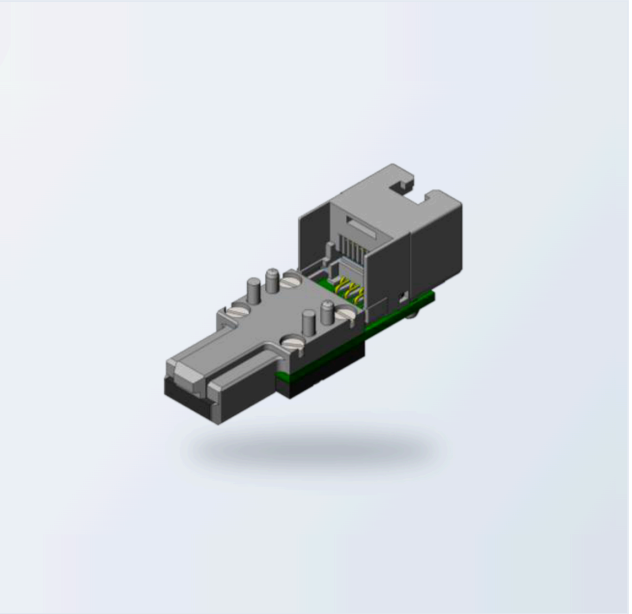

ELECTRICAL

Max. current	**0.5 A**
Max. voltage	**20 Vrms**
Dataline diff. impedance	**100 Ω**

MECHANICAL

Mating force	**12 N (typ.)**
Unmating force	**7 N (typ.)**
Durability	**50 000 cycles (typ.)**

ENVIRONMENTAL

Operating temperature	**0 – 60 °C**
Storage temperature	**−20 … +70 °C**
Relative humidity	**15 – 95 % non-condensing**
Compliance	**RoHS**

PINOUT

straight 1:1

Socket		Plug
1	→	1
2	→	2
3	→	3
4	→	4
5	→	5
6	→	6
7	→	7
8	→	8

DIMENSIONS

mm

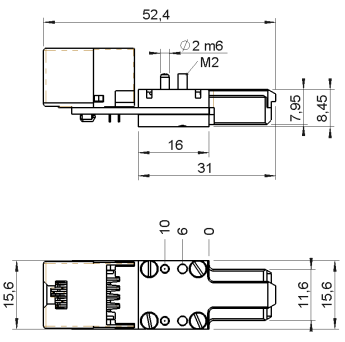

OPTIONAL ACCESSORIES

MA085139 Float unit for the RJ45 (8P8C) Test Connector — compensates for positional misalignment in automated test fixtures. Sold separately.

3D CAD models available on request via **sales@bluelec.com**

© 2026 Bluelec Oy. All rights reserved.
sales@bluelec.com · www.bluelec.com