Mini DisplayPort Test Connector

MA010395

BLUELEC
Part of JOT Automation

The **MA010395** is a 20-pin test connector with straight signalling, designed for testing the Mini DisplayPort or Thunderbolt interface between the DUT (Device Under Test) and the test system. A reliable, durable and highly accurate replacement for commercial cables and connectors.

All four main-link lanes (ML_LANE_0–3) are routed as differential pairs at 100 Ω impedance, together with the AUX channel, hot-plug (HPG), CONFIG_1/2 and DP_PWR signals.

The transmission of high data rates can be achieved — recommended to be verified in the applied test setup.

Designed for production testing, product development, repair and service centres, and laboratory use.

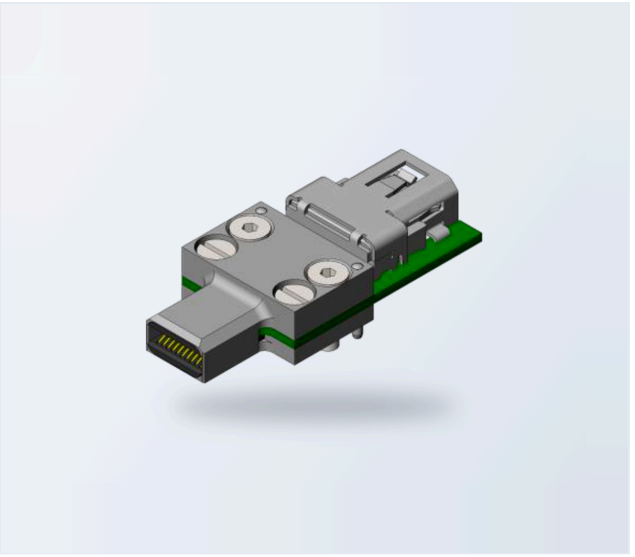

ELECTRICAL

Max. current	**0.4 A**
Max. voltage	**20 Vrms**
Dataline diff. impedance	**100 Ω**

MECHANICAL

Mating force	**9 N (typ.)**
Unmating force	**7 N (typ.)**
Durability	**50 000 cycles (typ.)**

ENVIRONMENTAL

Operating temperature	**0 – 60 °C**
Storage temperature	**−20 … +70 °C**
Relative humidity	**15 – 95 % non-condensing**
Compliance	**RoHS**

PINOUT

socket/plug

Pin	Name	Pin	Name
1	GND	11	ML_LANE_1_N
2	HPG	12	ML_LANE_3_N
3	ML_LANE_0_P	13	GND
4	CONFIG_1	14	GND
5	ML_LANE_0_N	15	ML_LANE_2_P
6	CONFIG_2	16	AUX_P
7	GND	17	ML_LANE_2_N
8	GND	18	AUX_N
9	ML_LANE_1_P	19	GND
10	ML_LANE_3_P	20	DP_PWR

DIMENSIONS

mm

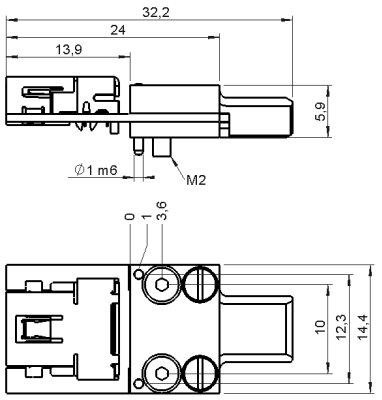

OPTIONAL ACCESSORIES

MA030013 Float unit for the Mini DisplayPort Test Connector — compensates for positional misalignment in automated test fixtures. Sold separately.

3D CAD models available on request via **sales@bluelec.com**

© 2026 Bluelec Oy. All rights reserved.
sales@bluelec.com · www.bluelec.com
Datasheet Rev. A3 · November 2026
Specifications subject to change without notice.