# DC Test Connector 2.5/5.5 mm

**MA009073**

BLUELEC
Part of JOT Automation

The **MA009073** is a highly durable test plug for testing the 2.5/5.5 mm DC connector interface. A reliable, durable and highly accurate replacement for commercial cables and connectors.

It has a DC jack with a 2 × 0.50 mm² cable for easy integration into the test system. Cable length is 300 mm.

Designed for production testing, product development, repair and service centres, and laboratory use.



## ELECTRICAL

| | |
|---|---|
| Max. current | **5 A** |
| Max. voltage | **48 V** |

## MECHANICAL

| | |
|---|---|
| Durability | **50 000 cycles (typ.)** |

## ENVIRONMENTAL

| | |
|---|---|
| Operating temperature | **0 – 60 °C** |
| Storage temperature | **−20 … +70 °C** |
| Relative humidity | **15 – 95 % non-condensing** |
| Compliance | **RoHS** |

## INTERFACE

| | |
|---|---|
| Plug type | **DC 2.5/5.5 mm** |
| Cable | **2 × 0.50 mm²** |
| Cable length | **300 mm (11.81 in)** |

## DIMENSIONS

mm

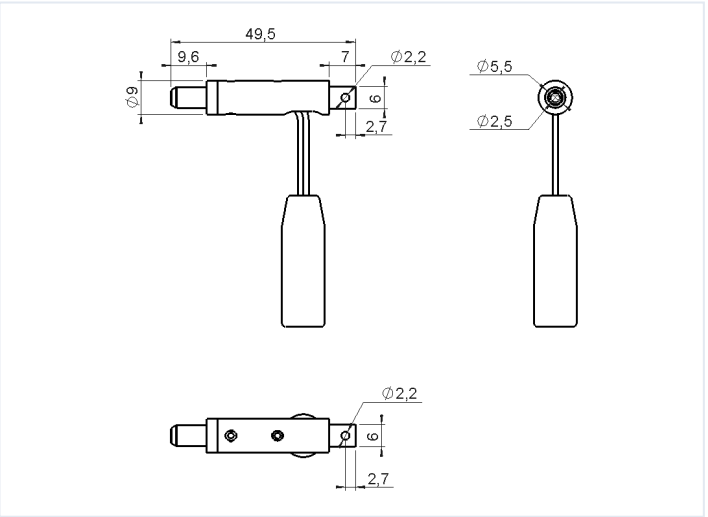


## OPTIONAL ACCESSORIES

**Float unit** A float unit for this test connector is in development — contact **sales@bluelec.com** for availability.

**3D CAD models available on request** via **sales@bluelec.com**

© 2026 Bluelec Oy. All rights reserved.
sales@bluelec.com · www.bluelec.com