TOSLINK Test Connector

MA009068

BLUELEC
Part of JOT Automation



The **MA009068** is a highly durable test plug for testing the optical TOSLINK connector interface. A reliable, durable and highly accurate replacement for commercial cables and connectors.

It has a TOSLINK jack with a Ø1 mm fibre cable for easy integration into the test system. Cable length is 300 mm.

Designed for production testing, product development, repair and service centres, and laboratory use.

OPTICAL

Interface	**TOSLINK (optical)**
Fibre diameter	**1 mm (0.04 in)**
Cable length	**300 mm (11.81 in)**

MECHANICAL

ENVIRONMENTAL

Operating temperature	**0 – 60 °C**	Relative humidity	**15 – 95 % non-condensing**
Storage temperature	**−20 … +70 °C**	Compliance	**RoHS**

DIMENSIONS

mm

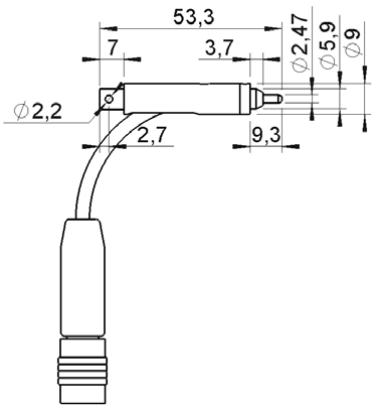

OPTIONAL ACCESSORIES

Float unit A float unit for this test connector is in development — contact **sales@bluelec.com** for availability.

3D CAD models available on request via **sales@bluelec.com**

© 2026 Bluelec Oy. All rights reserved.