Micro-USB 2.0 Test Connector

MA008072

BLUELEC
Part of JOT Automation

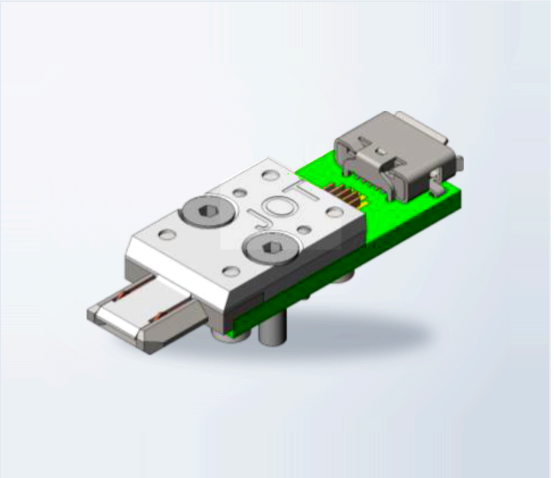

The **MA008072** Micro-USB 2.0 Test Connector is a 5-pin test plug with straight signaling, designed for testing of the Micro-USB interface.

All five pins are contacted — VBUS, the D± data pair, ID and GND — allowing full functional testing of the Micro-USB interface.

Signaling is routed straight through with no crossover, supporting USB 2.0 High-Speed (480 Mbit/s) operation; performance should be verified by the customer in the applied test setup.

Designed for production testing, product development, repair and service centres, and laboratory use.

ELECTRICAL

Max. current (VBUS/GND)	**1.2 A**
Max. current (other pins)	**1.0 A**
Max. voltage	**20 Vrms**
Dataline diff. impedance	**90 Ω**

MECHANICAL

Mating force	**4 N (typ.)**
Unmating force	**3 N (typ.)**
Durability	**50 000 cycles (typ.)**

ENVIRONMENTAL

Operating temperature	**0 – 60 °C**
Storage temperature	**−20 … +70 °C**
Relative humidity	**15 – 95 % non-condensing**
Compliance	**RoHS**

PINOUT

Socket / Plug

Pin	Name
1	**VBUS**
2	**D−**
3	**D+**
4	**ID**
5	**GND**

DIMENSIONS

mm

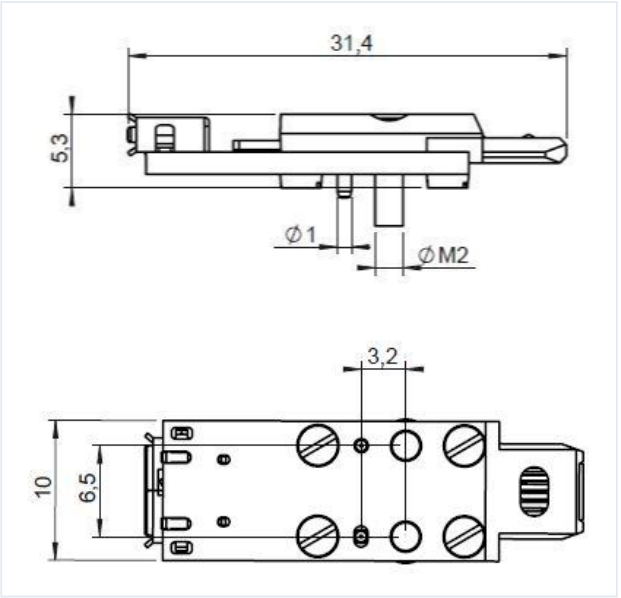

OPTIONAL ACCESSORIES

MA030684 Float unit for the Micro-USB 2.0 Test Connector — compensates for positional misalignment in automated test fixtures. Sold separately.

3D CAD models available on request via **sales@bluelec.com**

© 2026 Bluelec Oy. All rights reserved.
sales@bluelec.com · www.bluelec.com