Audio Plug Holder with Rotation

EM061275-1

The **EM061275-1** Audio Plug Holder is designed for use with the Bluelec **EM059575-0** 3.5 mm 4-pole audio test plug.

Its revolving head provides an efficient way to fasten the test connector to the test fixture while optimising the service life of the test connector.

Designed for production testing, product development, repair and service centres, and laboratory use.

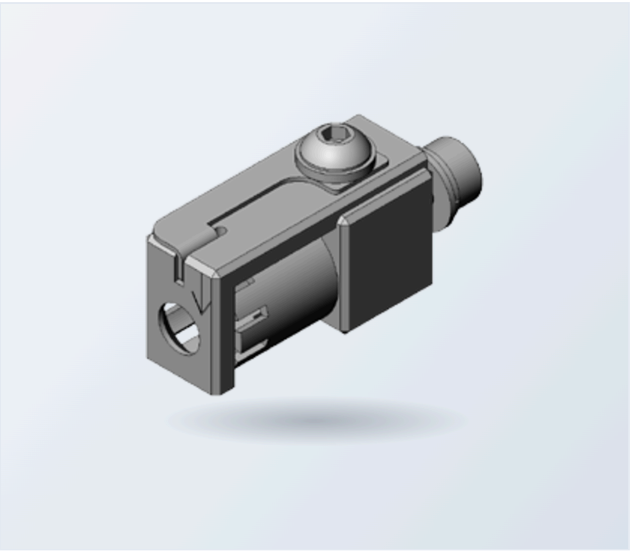

MECHANICAL

Overall length	**30.35 mm (1.19 in) (ref.)**
Overall height	**15.85 mm (0.62 in) (ref.)**
Body width	**10 mm (0.39 in)**
Head type	**Revolving**

INSTALLATION

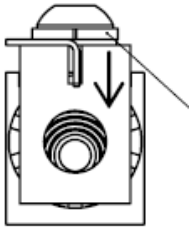

The test plug is inserted into the revolving head, which fastens it to the test fixture.

ENVIRONMENTAL

Operating temperature	**0 – 60 °C**
Storage temperature	**−20 … +70 °C**
Relative humidity	**15 – 95 % non-condensing**
Compliance	**RoHS**

COMPATIBLE TEST CONNECTORS

EM059575-0 Audio Connector 3.5 mm, 4-Pole

Sold separately from the test connector.

DIMENSIONS

mm

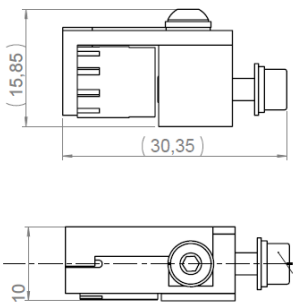

3D CAD models available on request via **sales@bluelec.com**

© 2026 Bluelec Oy. All rights reserved.
sales@bluelec.com · www.bluelec.com

Audio Plug Holder with Rotation

EM061275-1 | with audio plug **EM059575-0**

The holder is supplied assembled. To fit the **EM059575-0** audio plug, dismantle the holder, seat the plug in the bushing and reassemble with the cable exit rotated to suit the fixture.

> Do not overtighten the top bolt. The bushing must remain free to rotate before final tightening.

1 SEPARATE THE PARTS

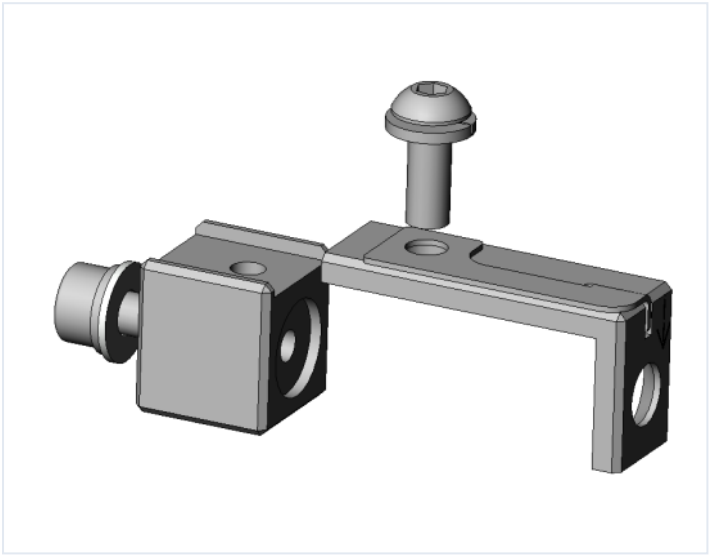

Unscrew the top bolt and separate the main parts.

2 SEAT THE PLUG

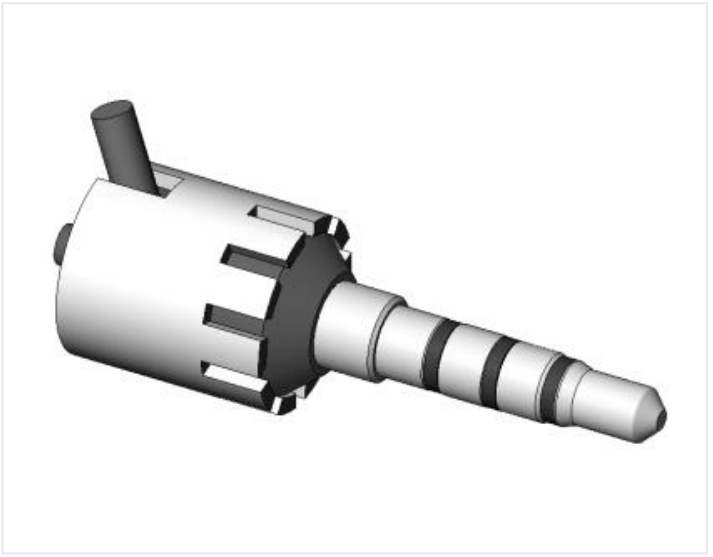

Set the plug inside the bushing.

3 ROTATE AND REASSEMBLE

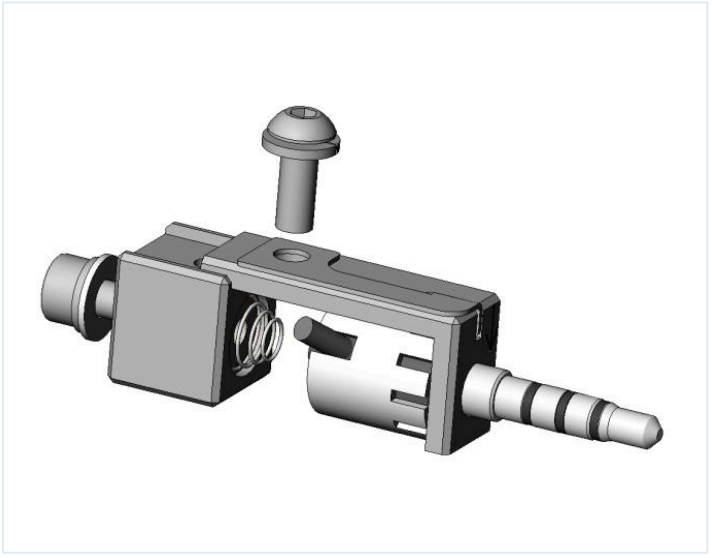

Rotate the bushing so that the plug cable exits in the direction you want, then assemble everything together. **Do not forget the spring.**

Reverse the procedure to remove the plug.

4 READY

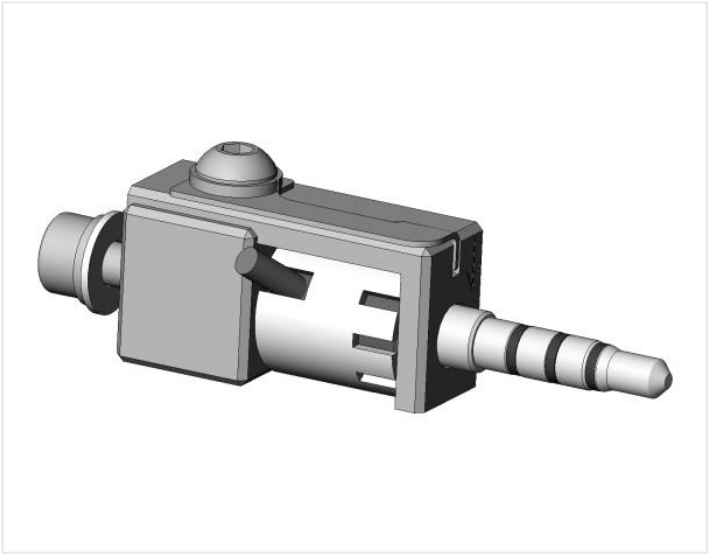

The holder is ready to be fastened to the test fixture.

© 2026 Bluelec Oy. All rights reserved.
sales@bluelec.com · www.bluelec.com
Datasheet Rev. A4 · November 2026
Specifications subject to change without notice.