Audio Connector 3.5 mm 4-Pole

EM059575-0

BLUELEC
Part of JOT Automation

The **EM059575-0** audio plug is a highly durable test connector designed for testing the 3.5 mm audio interface. A reliable, durable and highly accurate replacement for commercial cables and connectors.

The 4-pole (TRRS) plug is terminated to a Molex 43025-0600 system connector with 100 mm wires for easy integration into the test system.

Designed for production testing, product development, repair and service centres, and laboratory use.



INTERFACE

Interface	**3.5 mm 4-pole (TRRS)**
System connector	**Molex 43025-0600**
Wire length	**100 mm (3.94 in)**

MECHANICAL

ENVIRONMENTAL

Operating temperature	**0 – 60 °C**	Relative humidity	**15 – 95 % non-condensing**
Storage temperature	**−20 … +70 °C**	Compliance	**RoHS**

PINOUT

Molex 43025-0600

Pin	Signal
1	NC
2	Left channel
3	Microphone
4	Right channel
5	NC
6	GND

DIMENSIONS

mm

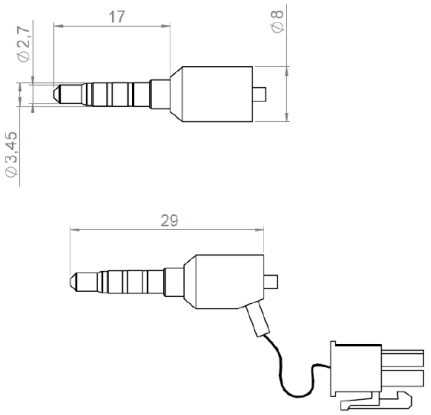

OPTIONAL ACCESSORIES

EM061275-1 Audio plug holder for the EM059575-0 audio connector. Sold separately.

3D CAD models available on request via **sales@bluelec.com**

© 2026 Bluelec Oy. All rights reserved.
sales@bluelec.com · www.bluelec.com